United States Department of the Interior
National Park Service

National Register of Historic Places
Registration Form

1. Name of Property

historic name **Klotz Confectionery Company Building**

other names/site number Louisville Stoneware Company/JFL-7

Related Multiple Property NA

2. Location

street & number 731 Brent St. NA not for publication

city or town Louisville NA vicinity

state Kentucky code KY county Jefferson code 111 zip code 40206

3. State/Federal Agency Certification

As the designated authority under the National Historic Preservation Act, as amended,

I hereby certify that this ___ nomination _X_ request for determination of eligibility meets the documentation standards for registering properties in the National Register of Historic Places and meets the procedural and professional requirements set forth in 36 CFR Part 60.

In my opinion, the property _X__ meets ___ does not meet the National Register Criteria. I recommend that this property be considered significant at the following level(s) of significance:

___ national ___ statewide _X_local

Applicable National Register Criteria:

_X__A ___B ___C ___D

Signature of certifying official/Title **Craig Potts/SHPO** Date

Kentucky Heritage Council/State Historic Preservation Office
State or Federal agency/bureau or Tribal Government

In my opinion, the property ___ meets ___ does not meet the National Register criteria.

Signature of commenting official Date

Title State or Federal agency/bureau or Tribal Government

4. National Park Service Certification

I hereby certify that this property is:

___ entered in the National Register
___ determined eligible for the National Register
___ determined not eligible for the National Register
___ removed from the National Register
___ other (explain:) _____

Signature of the Keeper Date of Action

5. Classification

Ownership of Property

X	private
	public - Local
	public - State
	public - Federal

Category of Property

X	building(s)
	district
	site
	structure
	object

Number of Resources within Property

Contributing	Noncontributing	
1	0	buildings
		district
		site
		structure
		object
1	0	**Total**

Name of related multiple property listing

NA

Number of contributing resources previously listed in the National Register

NA

6. Function or Use

Historic Functions
(Enter categories from instructions.)

INDUSTRY/PROCESSING/EXTRATION
Manufacturing facility

Current Functions
(Enter categories from instructions.)

INDUSTRY/PROCESSING/EXTRATION
Manufacturing facility

7. Description

Architectural Classification
(Enter categories from instructions.)

No style

Materials
(Enter categories from instructions.)

foundation: Limestone, concrete
walls: Brick, limestone, concrete
roof: Flat roof, not visible
other:

Narrative Description

Summary Paragraph

The Klotz Confectionery Company (JFCO-2679) is located mid-block at 731 Brent Street in the Paristown neighborhood of Louisville, Jefferson County, Kentucky. The Klotz Confectionery Company, the only structure on site, was built in 1937 as a candy manufacturing plant, which it continued to function as until the company closed in 1967. All 0.79 acres historically associated with the Klotz Confectionary Company are proposed for listing. There are no non-contributing buildings on site.

Character and Historic Use of the Site

The Klotz Confectionary Company is located on a site in Louisville just east of the city's central business district. The block in which it is sited is bounded by East Broadway Alley to the north (and East Broadway beyond that), Barrett Avenue Alley to the east, East Broadway Alley "B"/Louisville stoneware alley to the south, and Brent Street to the west.

The Highlands National Register District (1983, amended 2012, NRIS 83002680) is located to the east, the Phoenix Hill National Register District (1983, NRIS 83002721) and Butchertown National Register District (1976, NRIS 76000900) are located to the north, and the Smoketown National Register District (1997, NRIS 97000661) is located to the west. Directly north of the Klotz Confectionary Company is the National Register-listed Wirth, Lang & Company/The Louisville Leather Company Tannery Building (JFEP-13, 2000, NRIS 00000869).

Sanborn Insurance Map, 1892 Page 168

Sanborn Insurance Maps were consulted to observe the property's changes over time. According to the 1892 Sanborn Insurance Map, seven shotgun houses were located south of the subject property. A wood frame leather factory building associated with the Wirth, Lang & Company/The Louisville Leather Company Tannery Building was located directl`y on the subject property in 1892. The 1905-1922 Sanborn map is the first version in which with the present-day two-story brick Klotz Confectionary Company building and its two concrete block additions.

Sanborn Insurance Map, 1905-1922 Vol 5, Page 442

The 1905-1922 Sanborn Insurance Company map shows a wooden leather factory building associated with the Wirth, Lang & Company located directly on the subject property.

Sanborn Insurance Map, 1928 (with updates to 1962), Page 602

The 1928 Sanborn insurance map shows that the wooden leather factory building associated with the Wirth, Lang & Company/The Louisville Leather Company Tannery Building that once stood on the site of the subject property had been replaced by the present two-story brick building associated with the Klotz confectionary company. Added to the two-story brick core of the Klotz Confectionary Company building are concrete block additions to the north and south that date from prior to 1962. A small brick addition, perhaps a remnant of the Tannery Company is located on the rear of the site adjacent to the alley.

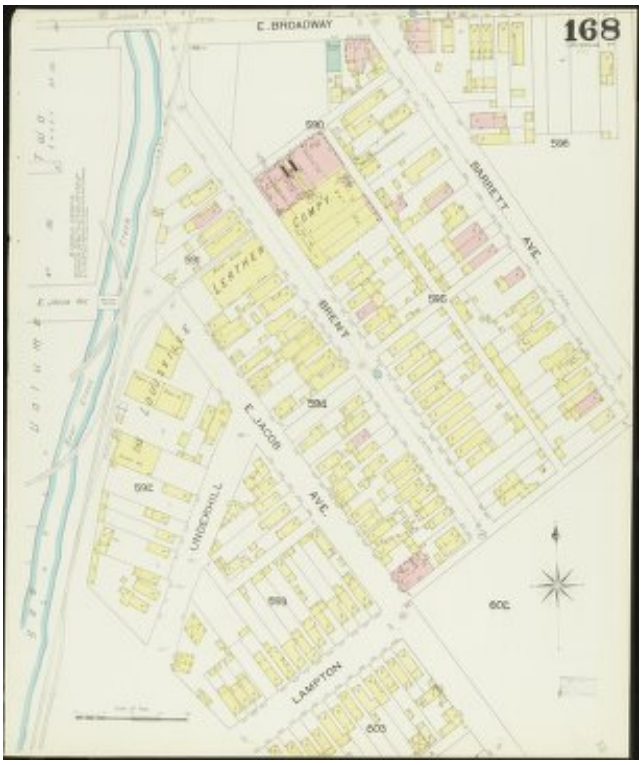

1892 Louisville Sanborn Map, p. 168 **1905 Louisville Sanborn Map, vol. 5, p. 442**

Caron's City Directories of the City of Louisville 1938-1967

Caron's City Directories of the City of Louisville corroborate that the Klotz Confectionary Company Building stood at 731 Brent St. between 1938 and 1967. The Klotz Company is listed in each directory between 1938 and 1967 at this site. The Caron's directories of the City of Louisville, from 1968 onward, indicate that the Klotz Company had closed, and in 1968, the site was occupied by the Reynolds Aluminum Company.

Description of subject property

West façade/primary

The Klotz confectionary company building is a two-story brick structure that sits on a zero lot line facing west. The primary façade is divided into 6 equal bays, each pierced with original metal-frame windows. The northernmost bay on the primary façade has a parapet wall that is slightly higher than the other 5 bays. Flanking the principal brick structure is a one-story concrete block addition to the south/right. This addition features metal loading dock doors and a window. To the north is a one-story concrete block edition that is enveloped by metal sheathing. The exact date of construction for these additions is unknown but it is clear that they were in place by 1962 and during the Period of Significance, based on their presence on the Sanborn Insurance Maps.

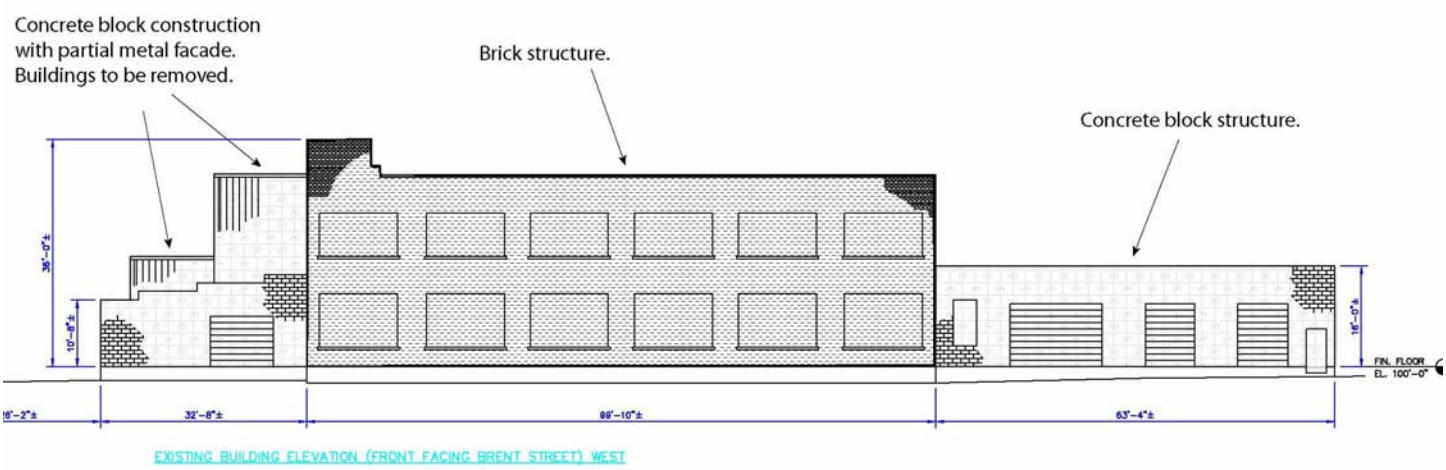

Brent Street elevation of Klotz Confectionary

Primary (west) façade, along Brent Street

West façade, along Brent Street

South façade/secondary

The South façade of the Klotz confectionary company features a one-story concrete block section of the building that predates 1962. This façade features regularly placed window bays (Windows are not visible) placed between evenly spaced pilasters. A single main door is located along this façade near a base section closest to the rear alley and leads to the Louisville stoneware corporate offices and show room. Adjacent to this Louisville stoneware entrance is a sunken landscaped seating area. Adjacent to the South/secondary façade is a multicar parking lot defined by asphalt, sidewalks, and car bumper bars.

South façade, Louisville Stoneware Parking

South façade, Louisville Stoneware entrance

North façade/secondary

The north façade of the Klotz confectionary company building faces to award Broadway. The brick exterior found on the primary/West façade continues around to the secondary/North façade. The same is true for the Windows on the primary façade. A one-story loading dock built of concrete block, a contemporary picket fence line, a wooden pergola, and a two-story addition that is sheathed in corrugated metal siding is all visible on this secondary/North façade. Toward the rear is a one-story brick section that appears older than the Klotz confectionary company proper. It appears to date from circa 1900 and may have been a relic from a portion of the building that once stood on the site.

North Façade, security fence

Pavement and Railroad tracks on North side

East façade/alley façade/secondary

The East/alley façade/secondary side of the building features a “mongrel” accumulation of building additions that appear to have a variety of construction dates. This discussion will begin by describing the additions going from south to north or left to right. On the left is a one-story continuation of the 1962 concrete block addition to the main Klotz Confectionary Company Building. It has several windows and doors, some of which are inoperable. Some have been blocked in with concrete block or wood sheathing. At the center of the East façade/alley façade/secondary façade is the two-story brick Klotz Confectionary Company building that stands alongside a one-story brick addition, topped by a shed roof. While this one-story brick addition has several windows, for the most part it is

windowless. Placed on top of one section of the brick one-story addition is a large container size block that is covered with asphaltic roofing material and appears to be a mechanical component to the building. Toward the northernmost end of this alley section is a single-cell brick structure that may be a remnant of an earlier structure that once stood on site. It may be the only remnant of the building that was destroyed by the 1937 fire, as described in section #8 of this National Register nomination. To the far north of this East Alley/alley façade/secondary façade is a white picket gate topped by scalloped trim work that serves as a means of egress to the portion of the building that abuts the one-story Tannery building that lies just north of the Klotz confectionary company proper.

East façade from southern part of alley

East Façade from northern part of alley

Interior

The historic core of the Klotz Confectionary Company building features regularly spaced columns wooden columns and wood flooring throughout. Based on the size and age of the wood timbers it may be that the wooden structural system was salvaged from the wood frame building associated with the Wirth, Lang & Company/The Louisville Leather Company Tannery Building. Further investigation is necessary to support this theory. Both the north and south concrete block additions feature concrete floors and metal structural supports.

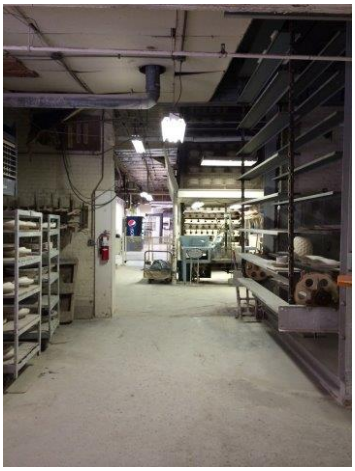

Interior views

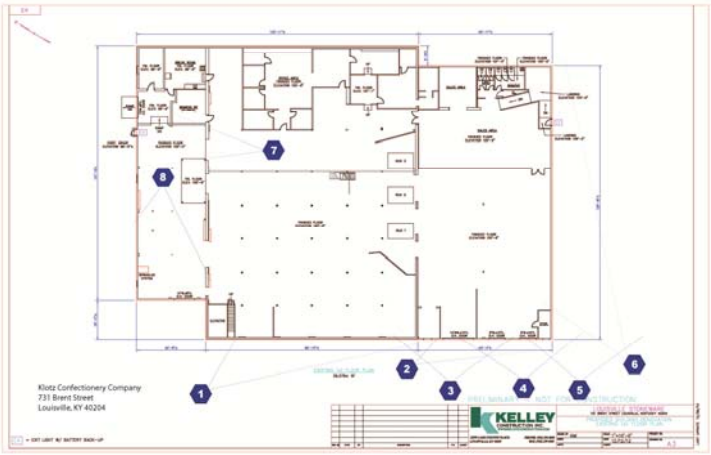

First-floor Plan

Second-floor Plan

Changes to the Klotz Confectionary Company's core brick building since the Period of Significance

The Louisville Stoneware Company was founded in 1970 by John M. Robertson who was formerly a ceramic engineer for the American Standard manufacturing company. According to the Louisville Encyclopedia, the roots for Louisville Stoneware reach back as far as 1879. Based on a phone conversation with John M. Robertson, he initially leased the Klotz manufacturing company building before purchasing the building outright around 1971. He indicated that under his ownership there were several changes made to the interior that included: adding concrete ramps to accommodate changes in floor levels, adding a door on the South façade along with a corresponding interior pedestrian ramp, and the addition of corrugated fiber. Fiber glass fiberglass panels

On the primary façade, some of the 1st-floor windows facing Brent Street have been covered or partially covered with easily removable corrugated plastic panels. Large window fan vents have also been added. All second-floor windows are clearly visible.

Changes to the North addition, from before 1962 to present

The north concrete block addition has been partially covered over with metal sheathing. A small brick portion, adjacent to the alley, is obscured by the concrete block addition.

Changes to the South addition, from before 1962 to present

The south concrete block edition has had no changes with the exception of newer garage doors and a retractable awning covering the loading dock bay.

Parking lot, Date unknown

The south portion of the site, located at the corner of Brent and East Broadway Alley "B"/Louisville Stoneware Alley is now occupied by a surface parking lot.

Use of the building during the Louisville Stoneware Company ownership (1970-to present)
The Louisville Stoneware Company was founded in 1970 by John M. Robertson who was formerly a ceramic engineer for the American Standard Manufacturing Company. According to the Louisville Encyclopedia, the roots for Louisville stoneware reach back as far as 1879.

Current Rehabilitation Plans
Kentucky Ceramics LLC, plans to renovate the Klotz Confectionary Company building along with the adjacent Wirth, Lang & Company/The Louisville Leather Company Tannery Building, utilizing the Federal and State Historic Rehabilitation Tax Credits. Once renovated, the complex will serve as the show room and factory for the Louisville Stoneware Company. All work will be completed according to the *Secretary of the Interior's Standards for Rehabilitation*.

8. Statement of Significance

Applicable National Register Criteria

(Mark "x" in one or more boxes for the criteria qualifying the property for National Register listing.)

- [x] A Property is associated with events that have made a significant contribution to the broad patterns of our history.
- [ ] B Property is associated with the lives of persons significant in our past.
- [ ] C Property embodies the distinctive characteristics of a type, period, or method of construction or represents the work of a master, or possesses high artistic values, or represents a significant and distinguishable entity whose components lack individual distinction.
- [ ] D Property has yielded, or is likely to yield, information important in prehistory or history.

Criteria Considerations

Property is:

- [ ] A Owned by a religious institution or used for religious purposes.
- [ ] B removed from its original location.
- [ ] C a birthplace or grave.
- [ ] D a cemetery.
- [ ] E a reconstructed building, object, or structure.
- [ ] F a commemorative property.
- [ ] G less than 50 years old or achieving significance within the past 50 years.

Areas of Significance

(Enter categories from instructions.)

Industry

Period of Significance

1937-1967

Significant Dates

1938

Significant Person

(Complete only if Criterion B is marked above.)

NA

Cultural Affiliation

NA

Architect/Builder

Unknown

The Period of Significance: 1937-1967

The Period of Significance, 1937-1967, marks the time during which the property is important within its historic context. The property continued to contribute to the confection industry until 1967, when the Klotz confectionary company ceased to exist and was closed and sold to the Reynolds Aluminum Company.

Criteria Considerations NA

Statement of Significance

Summary Paragraph

The Klotz confectionary company building (JFL-7), meets National Register Criterion A and is significant within the context, "The Wholesale Candy and Confection Business in Louisville Kentucky, 1890-1965." The Klotz Confectionary Company conveys important information about how one midsize American city provided wholesale candies to a regional market in the early-20th century. This building helps tell the story of how the sales of candies expanded from a single store production and retail operation into an industrial manufacturing process.

Historic Context: The Wholesale Candy and Confection Business in Louisville Kentucky, 1933 -1965.

Candy and confections

In its most basic form, candy is a substance that uses sugar as its principal ingredient. According to the entry for candy accessed on Wikipedia (https://en.wikipedia.org/wiki/Candy, August 30, 2015), "The category, called *sugar confectionery*, encompasses any sweet confection, including chocolate, chewing gum, and sugar candy." According to culinary historians, most sugar in the United States is derived from one of the following sources: brown sugar, confectioners' sugar, corn syrup, granulated sugar, high fructose corn syrup, honey, maple sugar, molasses, refined white sugar, sorghum, or sugar beets.

Chocolate, which is often associated with candy and confections, is very generally categorized in three forms: 1) unsweetened chocolate (contains no sugar), 2) bittersweet or dark chocolate (contains some sugar), and 3) milk chocolate (uses milk or cocoa solids as an additive).

Both candy made from sugar and candy made from chocolate serve as the basis for most candy and confectionery production.

Industrial Revolution (post-Civil War to 1920s)

The Industrial Revolution brought about advances in food technology. Perhaps the most important innovation was the invention in 1847 of the "candy press" which was used to shape sugary ingredients into clearly defined forms like pillows, lozenges or fish. By 1851, candy makers began using a double boiler cooking technique (called a revolving steam pan) to make candy. This innovation meant that the sugar in the candy was less likely to burn because the heat was more evenly distributed. This meant that the candy maker was no longer tied to the stove, guarding the sugar confection against burning, as it reached a proper temperature in its way to becoming candy. Essentially the double boiler freed up personnel so that it was only necessary for one or two people to run an entire candy business. Other factors that influenced the increase in the production of candies and confection included cheaper prices for sugar and the use of candy thermometers.

Coupled with scientific knowledge and innovations in cooking techniques and equipment, candy production soared after the Civil War. During the postwar period and up to the 1920s, a number of popular candies were introduced to the American public. Many of these candies are still manufactured today. According to Beth Kimberly, in *Candy: the Sweet History*, those early candies include Wrigley's gum (Spearmint, Juicy Fruit), Baby Ruth (Curtiss), Hershey Bars (Hershey), Good & Plenty, Cracker Jacks, Hase's Tween Meals, Tootsie Rolls, Candy Corn (called "Chicken Feed," by Goelitz Confectionery company), Nik-L-Nips (liquid sugar/flavored filled wax novelties), NECCO wafers, Hershey's Kisses, Life Savers, Goo Goo Clusters (a

southern favorite), Godenberg's Peanut-Chews (Philadelphia area), Mounds Bards (Peter Paul), Milky Way Bar (M&M Mars), Bit-O'Honey, Milk Duds, Heath Bars, Reese's Peanut Butter Cups, Snickers Bar (M&M Mars), Dubble Bubble bubble gum (Fleer), Chases's Cherry Mash, Gummi Bears, Pez, Twizzlers, Cotton candy, Conversation Hearts, Jujyfruits (Henry Heide Co.), Chuckles (jelly candies), Charleston Chew, Almond Rocha (Brown & Haley), Mr. Goodbar (Hershey's), and Mike & Ike.

Candy packaging or wrapping

Wrapping candy or confections has long been used as a method by which to protect the sugary substance from air, moisture, dirt, and germs. Packaging historically has ranged from wax paper to aluminum foil to cellophane to cardboard and everything in between. The wrapping or packaging is closely associated with product advertising. The wrapping on each piece of candy or candy bar served as a tiny billboard for the contents within. There is even a "Candy Wrapper Museum" devoted solely to candy packaging and advertisement. The federal Food Act of 1906 standardized quality control in the candy industry.

Louisville Candy and Confection Making

Gary Falk, who has written extensively on industries in the Falls City, says that Louisville has long been noted for its, "rich history in the manufacturing and distribution of candies and confectioneries". In his book *Louisville Remembered,* Falk includes details about Louisville candy companies arranged by company name, specialty, timeline (when they were in operation and when they went out of business), location, and the type of candy or confectionery establishment they ran. This single document provides the most complete overview of candy and confection making in Louisville Kentucky. It serves as the basis for the discussion of candy and confection making in Louisville Kentucky and forms a good overview for the **Historic Context: The Wholesale Candy and Confection Business in Louisville Kentucky, 1933 -1965.**

Louisville candy companies

Company Name	Specialty	Timeline	Location	Establishment type
American Chicle Company	Kis-me chewing gum			Mom and pop type?
Barton's		1965	531 S. 4th St.	Mom and pop type
Bauer's Candy	Modjeskas	1889-present	Bardstown Road, Frankfort Avenue; located in Lawrenceburg, Kentucky, as of 2015	Mom and pop type
Benedict's Restaurant	Birthday cakes, candy roses	1888-1934	4th Street (Jenny Benedict), between Walnut (Muhammad Ali) and Chestnut	Mom and pop type
The Bourbon Ball	Bourbon candies		1101 Goss Ave.	Mom and pop type
Bradas & Gheens	**Nightingale chocolates/anchor brand**	**1833-1960s**	**817 South Floyd St.**	**Wholesale industrial factory**
Busath's	Modjeskas	1880-1947	445 S. 4th St. (Anton Busath)	Mom and pop type
Christ Kraemer's	Restaurant, bakery and confectionary	1890s	3rd Street	Mom and pop type
Clark Candies	Pulled Cremes		Merged with Ruddell, 3921 Chenoweth square	Mom and pop type
Curtiss Candy Company			1544 Story Ave.	Mom and pop type
Davis Candy Company/Louisville J Davis		1965	764 S. 4th St.	Mom and pop type
Dundee Candy Shop			2212 Dundee Rd.	Mom and pop type
4th Avenue Candy Shop		Early 1900s-closed 1990s	800 E. Broadway; also called old 4th Avenue candy shop; later on Bardstown road near Eastern	Mom and pop type

			Parkway	
Hellmueller Baking Company	**Chocolate pickaninny**	**1927-circa 1940**	**Webster and Washington streets**	**Wholesale industrial factory**
Humphy's Candy Company			1419 East Washington St.	Mom and pop type
Klein's Confectionery And Restaurant	Candies, cakes, crystallized fruits	1865-1920s	456 S. 4th St.	Mom and pop type
Klotz Confection Company	Chocolate turtle	Located at 731 Brent St. from 1938-1967	731 Brent	Mom and pop type
Kremer Candy		Left blank	F. J. & Sons, 346 E. Jefferson	Mom and pop type
Langin's Candy Shop		1950s	425 W. chestnut	
Louisville And Jeffersonville	Hard candy		347 Spring St. (Jeffersonville)	Mom and pop type
Massey And Wyrick Candies			1533 S. 1st St.	Mom and pop type
Mattingly Brothers Candy Company	"Matty-Boy" peanut cake	1923-1940	8th and Jefferson	Mom and pop type
Menne Candy Company	"Eagle Brand" chocolate	1882-1925	Frank a. Menne, Main and Wenzel	Mom and pop type
Muth Candy Company		1921-present	526 E. Market; 630 E. Market	Mom and pop type
National Candy Company		**1924-1970**	**14th and Broadway**	**Wholesale industrial factory**
Parkland Confectionery		1965	1234 S. 28 Street	Mom and pop type
Reeds Candy Company	18 flavors of ice cream	1930s-1960s	600 block of 4th Street; 3600 W. market and forth and oak	Mom and pop type
Ruddell Candy Shop	Bourbon candies	1950s	Later merged with Clark, 2003 Frankford Ave.; 3310 Frankford Ave.	Mom and pop type
Rudolph's, Inc.		1930-1948	Downtowns; previously at Rudolph and Bauer	Mom and pop type
Schimpff's Confectionery	Red hots, turtles, fish	1850s-present	Began in Louisville, now located on Spring St., Jeffersonville, Indiana.	Mom and pop type
Solgers Confectionery Store	Marron glaces	1870-1922	T. L. Solger, Northeast corner 4th and Broadway	Mom and pop type
The Taffy Pull	Taffy	1960s	1324 East Washington St.	Mom and pop type

Excerpted from Louisville Remembered, pages 151-153, Gary Falk author
(MLA footnote: Falk, Gary. Louisville Remembered. Charleston, SC: History Press, 2008. Print.).

Early origins of candy making in Louisville

While the origins of Louisville's candy and confectionery businesses are not clearly known, the commercial industry is believed to have had it start in Louisville in 1833 when Peter Bradas started his candy company. What follows is a description of several of the larger candy manufacturers who have left behind written documents that attest to their product and a glimpse into their role in the manufacture of candy and confections in Louisville.

Bradas and Gheens

Bradas as and Gheens was the first and most prominent candy and confectionery manufacturers in Louisville, Kentucky. In many ways, their operation set the tone for candy manufacturing in the city, the state and throughout the US.

As early as 1833 Peter Bradas owned a confectionary shop on Fourth Street between Main and Market Streets in Louisville. According to City Directories, Peter Bradas was a "confectioner and dealer in fancy goods". There is some evidence that Peter Bradas was also a wholesale and resale source for fresh fruit. After Peter Bradas died in 1881, his son James took over the family business and continued making candy and confections. By 1899, he had formed a partnership with C. Edwin Gaines. This partnership was marked by a name change to Bradas and Gheens, Incorporated. James Bradas retired in 1920 and C. Edwin Gaines became president. Under

the leadership of C. Edwin Gaines, the candy company experienced tremendous growth. By the 1940s, Bradas and Gheens had moved from the Fourth and Main Street area to a modern industrial plant at 817 South Floyd Street in an area that is commonly referred to as Smoketown.

According to a comprehensive corporate history that was compiled by Jane Poling in January of 1942, Bradas and Gheens supplied 80,000 pounds of candy daily to 48 states. At the height of their candy-making production, there were over 400 factory workers working both day and night to produce "chocolate covered nuts of all kinds, lollipops, orange slices, coconut bonbons, gumdrops, nuggets, jellybeans, butterscotch, marshmallow puffs, candy corn, cough drops, or hound drops, butter creams, hard candy, caramels, jelly tangerines, mints, bulk candy, bar candy, box candy, stick candy, and so on down the seemingly endless line." The latest and most innovative factory production techniques were utilized.

Bradas and Gheens used their own fleet of trucks to ship their goods but, because of the volume they produced, they also relied on trains and on commercial trucking fleets. According to Poling's history, Bradas and Gheens is "the only candy company in the entire South making most of [their] own chocolate." They began importing chocolate beans in 1914. Poling goes on to describe the industrial manufacturing process and the pride the company had in making their product:

> Those cocoa beans go down through 3 graters from the top of the machine, and come out in liquid form at the bottom into 150 pound cans. It may surprise you to learn that the best cocoa beans we import come from the Gold Coast of Africa…We do get some from Jamaica and South America. Even though the chocolate syrup coming out of the bottom of the grater looks perfectly smooth and luscious, Bradas as and Gheens are not satisfied with their syrup until it has been smoothed out for 48 hours more in the same dozen or so around, revolving machines that resemble copper washing machines. Swirling the syrup around in these machines takes all the lumps out of the chocolate in case any remain, and the chocolate is tempered until it is just the desired smoothness that it takes to satisfy our requirements for good chocolate…after all this additional whipping of the chocolate, is it any wonder when, then, that you end up with some of the finest, if not, THE finest chocolates south of the Mason-Dixon line?

Polling goes on to note that Bradas and Gheens were most famous for their manufacture of "Nightingale Chocolates" and their "Anchor Brand Candy." Her corporate history ends with the remark that the company has "never failed to keep pace with moderate advancements, and looking over their record of the past, one can hardly overlook the fact that it takes a good factory to stand the brunt of civil wars, depressions, and periods of inflations and prosperity as well as this one has.

On the face of it, it appears that C. Edwin Gheens was the mastermind behind the success of Bradas and Gheens. According to the Gheens foundation website, C. Edwin Gheens was born in Louisville in 1878. His plans for college at Yale were derailed after he contracted typhoid fever. Instead of heading to college, he began working for his family's very successful wholesale grocery business. Because the family bought great deal of produce in Louisiana and shipped it upriver for sale in Louisville, C. Ewin Gheens' father bought a plantation 50 miles southwest of New Orleans, Louisiana. Over the years, the Gheens family continued to purchase additional acreage and eventually assembled over 50,000 acres. At one point, according to the Gheens Foundation history, the estate was almost lost due to mounting debt. C. Edwin Gheens and his wife paid off the debt to save the plantation from foreclosure. Ten years later, significant oil and gas reserves were discovered on the property. As a result Mr. Gheens became a very wealthy man. In 1957, Gheens and his wife created the Gheens Foundation. It became their signature achievement. They gifted 1.3 million in grants during their

lifetime. After 1982, when Mrs. Gheens passed away, over $80 million in grants have been given away. Perhaps their most prominent contribution has been the establishment of the Gheens Professional Development Academy for the Jefferson County Public Schools.

Busath's Candy Shop
1898-?
Busath's Candy Shop, located at 336 West Jefferson St. in what is now the heart of downtown Louisville, was opened in 1898. It too was profiled in *Greater Louisville Illustrated*. The candy shop was a family affair with Miss Lillian Busath, Mr. Charles R Busath, and Edgar W. Busath taking over management of the establishment from their father, the founder of the business. Both the factory and the retail store for Busath's Candy Shop were located under the same roof and were housed in a three-story brick building. They employed between 12 - 15 "expert" candy makers year-round. According to *Greater Louisville Illustrated*, "The prime specialty of the firm is the famous "Modjeska Caramel," of which Mr. Busath was the originator and on which they enjoy a splendid mail order trade all over the United States. Otherwise their business is strictly retail and localized. All candies made by this firm are made by old-style hand methods; amid strict sanitary conditions and under the personal supervision of the members of the firm."

Muth's (1921-present)
Muth's Candy Store opened in 1921 at 533 East Market Street in the Phoenix Hill neighborhood of Louisville. The business is still in operation today at a "mom-and-pop" storefront at 630 East Market Street, just a block from their first location. The family tradition of making and selling handmade candies continues. The company is noted for their bourbon balls and caramel covered marshmallows called Modjeska's. The latter candy has a long tradition in Louisville.

The Modjeska was created by candy maker Anton Busath who operated a "mom-and-pop" candy shop using the family name. According to local lore, Busath attended the American premiere of Henrik Ibsen's play, *A Doll's House*, at the Macauley Theater. He was so taken with the play's star, Polish actress Helena Modjeska, that he presented her with a sample of his handmade Caramel Biscuit, and asked her permission to name the candy after her. The actress consented and the Modjeska candy was branded. Meanwhile, candy makers Joseph Rudolph and Frederick Bauer, as well as Muth's Candy Store made and sold the same Caramel Biscuit that was available through Busath's. When Busath's was closed after being destroyed by a fire in 1947, "the name Modjeska was transferred to the caramel biscuits made by Rudolph and Bauer, and to Muth's. The latter remains in Louisville, while Rudolph and Bauer (now simply Bauer's Candies) moved operation to Mount Eden, Kentucky, about 1976, and to Lawrenceburg, Kentucky, in 1999. Between them, they provide the entire national output of Modjeska's" (Kleber, John, ed., *Encyclopedia of Louisville*, P. 624-625).

Schimpff's Confectionery (1850s-present)
Schimpff's Confectionery, a candy and confection business that is still in operation in southern Indiana, can trace its origins to Louisville, Kentucky. Census records from the 1860 indicate that several members of the Schimpff family had a presence on Preston Street in Louisville. The family history indicates involvement in candy making as early as the 1850s. According to the company website, "Gus Albert [Schimpff], was...active in the candy-making trade in Louisville. In the late 1860s, Gus began working at C.G. Block & Co., a wholesale confectionery business, which, in 1871, became the Wurach & Bergreen Co. In 1877, Wurach sold out his interest in the company to employee, Gus Schimpff who thus became a proud part-owner. That company closed in 1889, and Gus began to work for one of the largest candy factories in Louisville, the Frank A. Menne Company." At about the same time, Gus's brother Charles was operating a successful candy store in nearby

Jeffersonville, Indiana, just across the Ohio River from Louisville, Kentucky. In 1891, Gus joined his brother Charles in southern Indiana where they continued in the family business in various capacities and at various locations, most notably on Spring Street in downtown Jeffersonville. Still under Schimpff family ownership, Schimpff's Confectionery celebrated their 110th year in the candy and confectionery business in 2001. Jill and Warren Schimpff continue the tradition of owning and operating a "mom and pop" candy and confectionery business that stands alongside a retail operation, a soda fountain, and a candy museum. (http://www.schimpffs.com/history.html, accessed August 2015).

Menne Candy Company (1882-1925)
Frank J. Menne was another important chocolatier in the Louisville area. His business, which was located at Main Street and Wenzel, in an area that is now known as the Butchertown neighborhood, employed as many as several hundred workers. According to Faulk, the Menne Candy Company, "…was shipping over 75,000 pounds of chocolate a year. About 1925, the Menne Candy Company, with its famous "Eagle Brand" chocolates, was purchased by the National Candy Company, which was located at 14th and Broadway.

Klotz Confectionery Company (1905-1967)
The Klotz Company began business in 1905. From 1938-1967 they were located at 731 South Brent St., Louisville, KY, just South of Broadway near the Beargrass Creek corridor and railway overpass in Paristown (adjacent to lower Highlands). The Klotz confection company factory building is now owned by the Louisville Stoneware Company. According to Gary Falk, author of "Made in Louisville", the company was owned by Fred Klotz, their specialty was candy and ice cream, and they employed 92 people. The Klotz Confectionery Company will be discussed in greater detail below.

Cuscaden's Ice Cream-1871-1929
The origins of Klotz Confectionary Company are closely tied to another local business, Cuscaden's Ice Cream. The common denominator for both Cuscaden's ice cream and for the Klotz Confectionary Company was sugar. Both used sugar as the main ingredient in their products whether that product was ice cream or candy.

Cuscaden's Ice Cream began in 1871 when George W. Cuscaden and his mother opened a small candy and confectionary store that also made and sold ice cream. According to the 1923 publication, *Louisville 50 Years Ago: a Souvenir*, "In those days ice cream was made by hand, and only during the summer months, and none was packed or delivered to the home. All ice cream was made by turning the freezer around and around until the cream was frozen to a stiff batter; then it was beaten or whipped with a paddle. Thirty gallons was a big day's work for a man." By 1880, the first ice cream machine was invented that increased production by leaps and bounds. Cuscaden was at the forefront of innovation in ice cream production. In 1875, Cuscaden opened one of the first ice cream factories in the United States and called it the Ice Cream Depo. According to company lore, in the early years of making ice cream it was tricky to attract customers. Cuscaden advertised using both advertising circulars and newspaper ads, and before long, his product was known statewide. Cuscaden was one of the first ice cream makers to ship ice cream via railroad lines. In the company's heyday, Cuscaden shipped ice cream as far as Virginia, Tennessee, and Indiana. By the 1920s, however, the business climate had changed: there were ice cream manufacturing plants in towns large and small across the country. According to Cuscaden, ice cream had become one of the biggest commercial industries in the US. According to the 1923 publication, *Louisville 50 Years Ago: a Souvenir Issued on the Occasion of the Louisville Board of Trade Luncheon on March 9, in Honor of Firms That Have Been in Business 50 Years or More,* "There have been inventions of machinery for handling milk, cream and ice cream and today the farmers ship thousands of gallons of milk and

cream on railroads. There was very little milk shipped on railroads 45 years ago, and no machinery of any kind to handle."

One of Cuscadens' most significant innovations was his invention of a patented machine for making ice cream bricks. Using this customized machinery, each brick of ice cream was divided into four colors and flavors. Using this method, he made thousands of gallons of ice cream bricks. Cuscaden discontinued the manufacture of "four-colored" brick ice cream in around 1922.

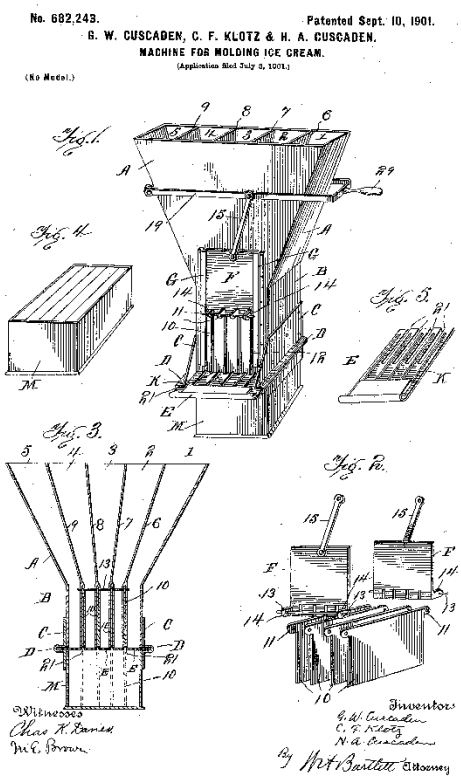

According to Jeanne Burke, step granddaughter of Arthur Cuscaden, the company eventually sold to Furnas and Hollenback Company during the Great Depression, who then sold to Borden Ice Cream. Evidently, the Cuscaden family had stayed in the ice cream business while the Klotz family branched out into candy and confections. This may have been a significant factor in the success of the Klotz Confectionary Company, as they surviving through the Great Depression and beyond.

On July 3, 1901 an application was filed by George Cuscaden, Charles F. Klotz, and Harry Cuscaden for an invention related to "molding ice cream into blocks or bricks having layers of different colors or flavors."

This brick of ice cream would look something like what is now commonly referred to as a Neapolitan ice cream. The following individuals were listed as witnesses to the patent application: James T Baker, Thomas S Pfeiffer, Philip Heuser and Thomas M Dixon. It is not known what the relationship was between the witnesses and the patent seekers, but presumably these gentlemen were either attorneys, business partners, employees or family members (US patent #682, 243: for machine for molding ice cream, 1901).

Klotz Ice Cream Works
1905-1968

It was not long after this invention was patented that C. F. Klotz senior went out on his own to establish the Klotz Confectionary Company. That C. F. Klotz wanted to venture out on his own is significant in that he had clearly learned how to manufacture ice cream from his previous employer and was now confident enough to launch his own independent endeavor. It is not clear why or under what circumstance Frederick Klotz, Senior severed ties with Mr. Cuscaden and embarked on his own as an independent ice cream maker and businessman. What is known is that by 1908, according to *Greater Louisville Illustrated*, F. C. Klotz, Senior was the proprietor of the Klotz Ice Cream Works. His establishment was located at 519 East Market Street in an area

now known as Phoenix Hill. According to published reports, Klotz had learned the trade of ice cream production and manufacturing well enough so that he "severed his connections with [Cuscaden] and embarked on business for himself."

According to *Greater Louisville Illustrated*, the Klotz confectionary company operated under several names and at several locations. Each name and location gives some information on the evolution of one Louisville ice cream, candy and confectionery company through all stages of the company's business, from growth to decline.

According to a 1908 publication, *Greater Louisville Illustrated*, the Klotz confection company began operation in 1905 as the Klotz Ice Cream Works. Their business address was listed as 519 East Market Street, in the current Phoenix Hill area (this information has also been verified by invoices from the Klotz confectionary company that were found at the Schimpff's Candy Museum in Jeffersonville, Indiana).

C. F. Klotz Sr., was keen to advertise on how-up to date and modern his ice cream facility was. It was important for the Klotz company to illustrate to customers how up-to-date and sanitary their establishment was, as many producers and manufacturers of consumable goods at this time were under fire for unsanitary conditions. Concerns over safe conditions led, in 1906, to passage of the original Food and Drug Act to "prohibit the interstate commerce in misbranded and adulterated foods, drinks and drugs." Essentially, the federal government was stepping in to make sure that producers were not harming the public with the goods they sold.

Before 1906, producers did what they could to protect the safety of their product. Klotz Ice Cream Works, and Later Klotz Confectionary Company, would have been aware of health-related publications. The health commissioner of Chicago worked with the bakery and confection workers union to publish a book intended to educate those in the food manufacturing business. The Bakery and Confectionery Workers International Union of America was organized in 1886, and product safety was one of their concerns. According to one published source, the Union writes, "May [this book] have the intended effect of creating a successful agitation against unsanitary and unclean cellar-bakeries wherever it is read." The book claims that bakeries should be exposed to daylight as bread and pastries made in dark "dens would be as injurious to the community as the cellars themselves would be to the bakers who work in them."

There were also publications that provided guidance to women in particular who were involved with the candy and confection industry. The United States Women's Bureau published guidance as early as 1922 on the number of hours, the wages received, and working conditions for women. This was especially important since women were employed in the candy and confection business in great numbers.

According to *Greater Louisville Illustrated*, the Klotz Ice Cream Works was capable of making 1000 gallons of ice cream per day, even with the business owners equally interested in the quality of their product over the quantity they could produce. The publication indicates, "Equal care is taken to have the ice cream manufactured from the best and purest materials possible. The latest improved machinery is used in the making of the cream and the newest models of cream separators are found in the factory." Reportedly, the company used innovative equipment in the form of Bryan Ice Cream Freezers because they believed that this brand was, "found to be the best by the concern and the factory is fitted throughout with the latest devices of this make a freezer."

Mr. Klotz was proud of the volume of business that his ice cream making establishment produced. In order to provide his ice cream to a local market, he had to have sufficient methods and materials by which to transport

his goods. According to Klotz, "The local trade of this firm is so great that 9 wagons are constantly in use and in the busy season more have been used, and these cover the entire city.

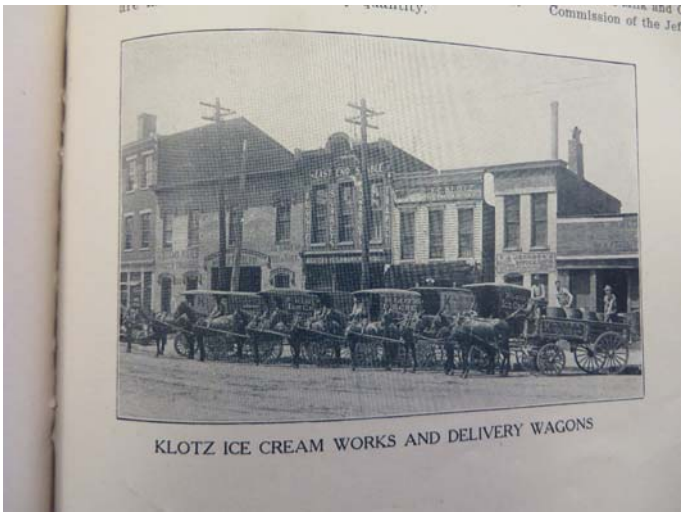

Photo showing horse-drawn delivery wagons in front of the Klotz Ice Cream Works, Greater Louisville Illustrated, 1908

Undated photo showing horse-drawn delivery wagons in front of the Klotz Ice Cream Works, from Klotz Family Archival Collection

In the few short years between 1905 when the company was founded and 1908 when a profile of the company appeared in *Greater Louisville Illustrated*, the company had grown at a rapid pace. "The local trade of this firm is so great that 9 wagons are constantly in use, and in the busy season more have been used, and these cover the entire city. In addition to the wagons, 8 pushcarts are used around town for retailing the product. Brick and fancy ice cream are the specialties that are made and retails in any quantity."

B y the summer of 1937, the Klotz Ice Cream Works had changed its name to the Klotz Confection Company, and had moved from its East Market Street address and taken up residence in an industrial facility located at 719-735 Brent Street, east of downtown Louisville. The change in name alone, from an Ice Cream Works to a Confection Company, suggests that the Klotz Company was turning their attention away from ice cream toward the manufacture of candy and confection. For the sum of $25,000, Mr. Klotz purchased a two-story brick manufacturing plant south of East Broadway that had been previously associated with R. Mansfield and Sons Incorporated, a local leather processing company. This new facility was located in close proximity to Beargrass Creek and the Louisville and Nashville railroad line. This new facility had a strategic location because it was close to East Broadway, a major east-west automobile artery and was close to nearby rail lines.

This move to a newer location, with a much bigger capacity to produce candy and confection for a regional market, portended a bright future. But all that would change on August 2, 1937, when a devastating fire engulfed the building. What follows is a newspaper account of the fire:

> As soon as repairs can be made normal operations will be returned at the 2-story brick plant of the Klotz confection company, 731 Brent St., gutted Monday morning by a 2-alarm fire said to have originated in

> a 2nd floor store room. Fred C. Klotz [senior], owner-manager of the plant, stated he was "too busy" to give an approximate estimate of the loss. The cause of the fire, which spread rapidly to all parts of the building, temporarily without interior fire protection, are undetermined. Mr. Klotz said there was no one on the 2nd floor at the time, and 27 persons who work downstairs, including 2 women employees and Mr. Klotz, left the building immediately. Mr. Klotz was at work in his office when he heard the employee shout "fire." He went upstairs with a fire extinguisher but found the flames beyond control. (August 3, 1937, *Courier-Journal*, "Fire Damaged Candy Firm Plans Repairs: Cause of Klotz Plant Blaze Undetermined")

According to the article, Klotz had purchased the building only 2 months prior. Luckily, the building was insured to cover the significant damage, along with the loss of sugar, a quantity of candy, and numerous other materials used in baking confections."

At some point it appears that the Klotz Ice Cream Company was renamed and was referred to as both the Klotz Confectionary Company and as the Klotz Candy Company. According to the members of the Klotz family, The Klotz Confectionary Company name was associated with the sale of regional candies and confections, while the Klotz Candy Company name was associated with local candy sales, perhaps at a local retail market.

Remarkably, in the same year that the Klotz confectionary company and the Klotz Candy Company suffered from a devastating fire, it appears that the entire facility was rebuilt and running as a candy and confectionary business. The advertising postcards provided sufficient visual evidence of exactly what this candy and confection facility looked like. Although no date is indicated on extant postcards, Bill Carner, former "Photo Wrangler" for the University of Louisville photographic archives, dates these photos to 1937, largely on evidence provided by the 1936 or 1937 General Motors Company (GMC) truck that appears in several of the images. Perhaps more importantly than the postcards themselves is the fact that the Klotz confectionary company was using up-to-date advertisement techniques in capturing their customer base.

Klotz Confection Company, one of the nation's fudge and brittle manufacturers (circa 1937)

Where Klotz's fudge and brittles are cooked-Klotz Confection largest Company, Louisville Kentucky (circa 1937).

Where Klotz's fudges and brittles are cooked -Klotz Confection Company post card (circa 1937).

Cutting Klotz's nutty brittle-Klotz Confection Company Louisville, Kentucky, post card (circa 1937).

Where Klotz's fudges and brittles are packed Klotz Confection Company post card (circa 1937).

In 1949, a railroad siding switch and easement were installed, which enabled goods from the Klotz Confectionary Company warehouse to be easily transported to and from this warehouse using the nearby rail line that ran parallel to Beargrass Creek. Evidence of this railroad spur can still be seen in the pavement on the public right-of-way at 731 Brent Street (see deed dated June 30, 1945, recorded in deed book 2031, page 73). As business was growing for the Klotz Confectionary Company, the company intended to branch out to a broader audience, much as the Bradas and Gheens company—their principal competitor—had done.

By June 29, 1946, Articles of Incorporation were filed with the State of Kentucky (company number #001-6433) for the Klotz Confection Company. The incorporation papers list the following individuals as acting on behalf of the Klotz confectionary company: Frederick C. Klotz the 3rd, Fred Klotz, Jr., J. Bernard Brown, and P. McKinley Harris. It is evident from the surname, however, that Fred Klotz, senior had, by then, passed on the business to Fred Klotz, Junior, and Fred Klotz the 3rd.

Advertising copy from articles archived in the Klotz family collection paints a very vivid picture of candy advertising. While no dates appear on any of the articles, graphically they appear to date from the mid-1900s. The Klotz company considered their specialty "the original square fudge bar." These chocolate products were candies or candy bars that included the following: nutty fudge (produced in both square in oblong shapes), Lady Helen squares, devilishly good squares, nutty brittle (made with peanuts, judging from the graphics that appear

on the packaging), chocolate turtles, and nutty Krunch (sic) bars. Items could be purchased in box to quantities of 24 or 120 items each. Brazil nuts included in several of the candies were also an option.

The way that Klotz sold to retailers is illustrated by one sale to the London Wholesale Company, located at 51 East 4th Street, London, Ohio. The London Company placed an order with the Klotz Confection Company that was delivered in whole or in part by C & D Motors Company. Attached to the candy order was a bill of transaction that explicitly stated the terms of the sale: 2% 10 days, net 30 days, freight prepaid. Under the strict terms of the candy delivery transaction, the Klotz confectionary company guaranteed that each item shipped or transported was clean and sanitary, properly boxed, and should arrive at its designated destination in satisfactory condition. If any discrepancy between what was ordered and what was delivered occurred. The Klotz company was to be contacted immediately, to settle any disagreements or disputes.

According to Klotz family descendants, the manufacturing plant at 731 Brent St. would've been used to manufacture candies and confections, but it had a retail outlet as well. At the ground level, family members report, was a small retail outlet accessed by a doorway. Neighborhood customers would enter the retail space through a door and would stand at a display case that served as a candy counter. Here, a customer service representative would ring up retail sales to a neighborhood clientele. Thus, this particular business had both a regional customer base, and a very local neighborhood customer base. The more formal name of the Klotz Confectionary Company was used for regional wholesale purposes, while the Klotz Candy Company name was used for local neighborhood customer sales.

Scrapbooks of the Klotz Confectionary Company have been maintained by members of the Klotz family for many years. They provide a wealth of information as to how the company captured and maintained their market share. What follows is the transcribed text that gives the reader a flavor of the advertising techniques and tools that were used by the Klotz Confectionary Company through the years. No doubt these techniques were key to the company's success and longevity.

In 1955, The Klotz confectionary company celebrated their 50th year anniversary.

1960

In 1960, Jeff H. Jaffe purchased the Klotz confectionary company ending over 50 years of candy and confection production in Louisville, Kentucky the New York Times obituary for Jeff Jaffe, dated September 15, and 2014, lists Mr. Jaffe as "Chairman and President of The Chunky Corporation and President and CEO of Ward Foods Candy, Ward Foods Branded Foods Group, Schrafft Candy Company and Bernan Foods".

Jaffe began business in 1950 by leveraging "the purchase of a small bankrupt candy company in Brooklyn known for a chocolate bar called CHUNKY. Due to his marketing skills and ability to take risks and win, he built Chunky into a major player in the candy industry." The obituary goes on to say that, "through the years, Mr. Jaffe acquired other candy companies:

- In 1951, he reached an agreement with Rowntree & Company of York, England to import Kit Kat, the famous chocolate covered sugar wafer candy bar, and shortly nationwide distribution was successfully achieved.
- Shutter Candy Company, manufacturer of Bit-O-Honey and Old Nick, was purchased in 1958, and
- Klotz Confection Company in 1960.

- In 1965, he bought Chocolate Sponge from Heide Candy Company and produced it in the Shutter plant in Chicago.
- He added Oh Henry!, purchased from the Williams Candy Company, to Shutter in 1971."

Mr. Jaffe mounted an exhibit at the New York world's fair on the Chunky candy bar, and later his business model for acquisitions and mergers was used as a Harvard business school case study. By 1971, Jaffe was recognized in 1971 as "Candy Man of the year" by candy industry magazine. His business philosophy and style were profiled in the self-published book entitled "How Sweet It Is" that was published in 2012 (Jaffe, Jeff H. *How Sweet it Is*, Professional press, no city, 2012).

On March 12, 1997, John M. Robertson, president, on behalf of the Louisville stoneware company, sold the property at 731 Brent St. to Christina Lee Brown, managing member, on behalf of Kentucky ceramics LLC. Charles Frederick Klotz, III, is the last surviving descendent of the Klotz family to be actively involved in the manufacture of candy and confections. He lives in Fisherville, Kentucky and is now retired.

Evaluation of the Significance of the Klotz Confectionary Company within the Historic Context: The Wholesale Candy and Confection Business in Louisville Kentucky, 1833-1965

The 1937 Klotz Confectionary Company building, located at 731 Brent Street in Louisville, Kentucky is significant within the historic context "The Wholesale Candy and Confection Business in Louisville Kentucky, 1933 -1965" because it shows an important instance of how a small candy and confection business grew into a larger candy and confection manufacturing business, which eventually came to provide goods to a regional candy and confection market.

The Brent Street building and its pre-1962 building additions clearly illustrate the physical growth and expansion of a Louisville candy and confection manufacturing plant. This growth and expansion is seen in the construction of the core 1937 candy manufacturing building, which itself was an outgrowth of a small retail storefront ice cream and candy shop built in 1905. Growth and expansion of this Louisville candy and confection manufacturing plant occurred I the form of north and south additions that predate 1962. These two additions indicate that the success of the candy and confection manufacturing business necessitated an enlargement of the physical plant. Infrastructure improvements further illustrate the growth of the Klotz Confectionary Company as conveyed by the installation of a railroad easement and spur line dating from 1945, physically linking plant to the nearby transportation system. This spur line enabled manufactured candy and confections to be shipped efficiently from the plant to a regional market. The purchase of the Klotz confectionary company in 1960 by a larger candy and confectionary company, The Chunky Corporation, under direction of Jeff H. Jaffe, further signifies the evolution of the candy and confection business in Louisville Kentucky. In this case, the regional candy and confectionary manufacturing business was subsumed by a national candy manufacturing conglomerate that went on to provide candy to a national market.

The arc that Klotz Confectionary Company traces potentially teaches us one model of industrial success. Louisville's many candy companies categorized as "mom and pop" operations frequently did not survive beyond a generation, that is, for as long as the "mom and pop" and other family members worked to enable the business to survive. Unless such candy corporations had a very special product, they must have served a market that was restricted in geographic scope. People all throughout Louisville had a candy store a few blocks from their home. The local candy store might have one or two specialties, so a trip through Louisville at any time during the contextual period would enable the person hunting for sweets to find many similar treats—each with

that store's distinctive twist on the traditional confection—as well as that store's signature creation. While these small operations provided surprise for the first-time visitor and a very personal form of service, that business model had difficulty surviving a beyond a generation without growing.

Those candy and confectionary businesses that were intent on growth, may have succeeded by trading their emphasis on the personal and distinct, so that it could engage in a much larger scale of production for customers outside of the immediate area of the factory store. Klotz Confectionary Company helps show that an enduring life in this industry came about through establishing product lines that sold themselves without the personal touch of the business owner's retail persona.

The story of the Klotz Confectionary Company also indicates the time in the 20th century in which America's locally produced non-essential treat food products, which not only includes candies but also soft drinks, beers, and other consumables, transitioned from extremely localized markets to larger markets, which were regional and even national in scope. The rise of national advertising, transmitted over media such as radio and print publications, gave the most successful of those mom-and-pop operations a chance to extend their markets beyond the local arena. Klotz helps chart the success arc of one such Louisville business which underwent this transformation. One important aspect of moving from smaller operation into a larger operation are the logistics of the business. The gradual growth of the Klotz Company's physical plant gives a useful instance to view the way that the business's owners decided to support that growth, from local to regional to national candy company, with the nominated factory.

Evaluation of the Integrity of the Klotz Confectionary Company

The Klotz Confectionary Company Building is comprised of a single 1937 core structure which was expanded by additions to the north and to the south that were added during the Period of Significance. The basis for eligibility chosen is Criterion A. Criterion A requires that our ***associations*** with the important event be supported by the physical qualities of the property. The key integrity factor, then, is integrity of association, which exists if the property possesses these other integrity factors: location, design, setting, and materials. The site illustrates in its physical form the spaces that were essential to the company's candy production, as an evolving and growing business that became more significant in candy manufacturing in Louisville, Kentucky from the mid-1930s until the 1960s. Any other Louisville property associated with this context, found historically significant, must possess integrity of location, design, setting, materials, and association to be eligible for National Register listing.

The Klotz Confectionary Company Building retains **integrity of location**. The building remains in its original location at 931 Brent St. in the Paristown neighborhood of Louisville, Kentucky. It has never been moved or rebuilt.

The Klotz Confectionary Company Building retains **integrity of setting**. The core building has been a fixture in the neighborhood beginning in 1937. Additions were made to the north and south sides of the core building during the period of significance and this has added to the integrity of setting because these additions were made within the period of significance.

The Klotz Confectionary Company Building retains **integrity of design and materials**. Both the core 1937 building and the pre-1962 additions retain a high level of integrity with regard to design and materials largely due to the fact that few changes have been made to the building over time.

The brick façade of the core building that faces Brent Street looks much as it did when constructed in 1937. This fact has been verified by historic postcard images. All window openings are intact and have been only slightly altered by the introduction of industrial fan window assemblies inserted into some of the window openings. This change is reversible. Tie rod bolts have also been added to the brick façade of the core building but this treatment has not had a significant negative impact to the core structure.

The pre-1962 additions have had several alterations. These alterations have impacted the building's integrity of design and materials somewhat. The northernmost addition has several small changes, including sheathing of a portion of the north face of the building addition with corrugated metal siding. A wooden pergola and a contemporary picket fence have also been added adjacent to this northern addition. The primary façade of the southern addition has been altered by the some windows being blocked in.

One half of the secondary façade/south face of the northernmost addition has received cosmetic updates in the form of wooden veneer added over the concrete block, a new door introduced to the secondary façade to facilitate entry into the Louisville Stoneware business, as well as some landscape improvements, including a new sunken seating area, adjacent to the new man door. Inasmuch as the southern face of the northernmost addition is a secondary façade, when considering the use of the building as a candy and confection manufacturing plant, this change is not seen as so detrimental that it would prevent us from understanding the essential function that Klotz put this space to during the Period of Significance.

The alley façade is a secondary façade. It has had a variety of small-scale alterations/additions that give the building a mongrel appearance. However, inasmuch as the alley façade is a secondary façade and these alterations are either small-scale, they are viewed as not detrimental to the building's overall integrity of design or materials.

The interior **design** and **materials** have been altered by the conversion of the southernmost pre-1962 addition into a retail store for the Louisville Stoneware business. These alterations include changes to doorways and openings and to floor levels to facilitate communication between all three sections of the building. While changes have been made to the design and materials, the building continues to serve as an industrial manufacturing plant in a way that its historic functions are not obscured.

Overall, the Klotz Confectionary Company Building retains sufficient integrity of design, materials, and workmanship to convey a sufficient level of integrity on both the exterior and interior.

Because the Klotz Confectionary Company Building retains its overall integrity of location, design, setting, and materials, it will be said to have **integrity of association**. The judgment, that the building possesses integrity of associations, forms the basis for the claim of National Register eligibility.

9. Major Bibliographical References

Books

Caron's Directory of the City of Louisville. Louisville: Caron Directory Co, 1871 – 1970. Print.

Falk, Gary. Louisville Remembered. Charleston, South Carolina: History Press, 2008. Print.

Greater Louisville Illustrated .1908. (See Subject Profiles for-Bradas & Gheens, Busath's Candy Shop, Cuscaden's Ice Cream, Klotz Ice Cream Works, Epping Bottling Plant, R Mansfield and Sons Incorporated)

Kleber, John E., Editor. The Encyclopedia of Louisville. The University Press of Kentucky. 2001.

Jaffe, Jeff H How Sweet It Is, Professional Press, 2012.

Luhan, Gregory A.; Domer, Dennis; Mohney, David; Louisville Guide Princeton Architectural Press. New York 2004.

Thomas, Samuel W. The Architectural History of Louisville: 1778-1900. Filson Historical Society. 2009.

Thomas, Samuel W. Views of Louisville Since 1766. The Courier Journal, The Louisville Times. 1971.

Woloson, Wendy A. *Refined Tastes: Sugar, Confectionery, and Consumers in Nineteenth-Century America*. Baltimore: Johns Hopkins University Press, 2002.

Yater, George H. Two Hundred Years at the Falls of the Ohio: A History of Louisville and Jefferson County. The Heritage Corporation. Louisville, Kentucky. 1979.

Email Correspondence

Jeanne Burke, Jeanne_b@Hotmail.com, Clark County Indiana historian. September 9, 2015.

Gary Falk, Gfalk@aye.net, Louisville historian and author. Summer and fall 2015.

Michael E Maloney, Mike.Maloney@LouisvilleKY.gov. Louisville author. September, 2015.

Michele McGloshen and Carol Ann McGloshen, Scottmicmc@aol.Com, 533-5146. August and September 2016.

Private Collections

Schimpff's Confectionery Museum Collection, Warren and Jill Schimpff, Collection Curators, 347 Spring St., Jeffersonville, IN 47130, 812-283-8367.

Klotz confectionary company collection, Michelle McGloshan Klotz, 1414 Northaven Drive Jeffersonville, Indiana, phone: 533-5146. Klotz family, Pvt. collection (collection contents includes matchbooks, candy boxes, company invoices, company postcards, scrapbook with newspaper articles, pencils used for company advertisements, handwritten candy recipe notecards, framed memorabilia, photos, family photos, advertisement beanie imprinted with "Klotz nutty brittle")

Internet sources

http://www.schimpffs.com/contactus.html (Schimpf confectionary company)

Food timeline http://www.foodtimeline.org/foodcandy.html, accessed August 28, 2015.

Http://www.gheensfoundation.org/about_us (Gheens foundation & C Edwin Gheens)

Https://en.wikipedia.org/wiki/Candy, accessed: August 30, 2015.

Http://www.lib.uchicago.edu/e/webexhibits/chicagocandy/history.html, accessed August 30, 2015 (subject: exhibit entitled Sweet home Chicago: chocolate and confectionery production and technology in the Windy City)

Http://www.legacy.com/obituaries/NYTimes/obituary.aspx? Pid = 172464714#sthash .0 TPDqRsQ.dpuf obituary for Jeff Jaffe, the New York Times, September 15, 2014.

Http://www.gheensfoundation.org/about_us (Gheens foundation & C Edwin Gheens)

Filson Society Collection/the Filson Club Incorporated, Louisville, Kentucky

Kis Me Gum Company Advertising Flyer, N.D. [Ca. 1895]. One Item, Illustrated Advertising Flyer for Kis Me Chewing Gum, Product of Kis Me Gum Company, Louisville, Kentucky; JM Cladc and Company, Inc., Proprietors. Includes Directions and Interpretations for Playing with a Toy Fortune Teller Fish Which Once Accompanied the Flyer.,

Louisville Kentucky-50 Years Ago Souvenir of the Louisville Board of Trade (1873 – 1925) "Louisville's Half-Century Firms" (Includes Profiles of Bradas & Gheens, Cuscadens Ice Cream Works, Denunzio Fruit Company, Epping Bottling Works). Call Number RB 917-6991, B6 62.

Ephemera

Unpublished Manuscript, University of Louisville, Local History Series, Volume 1, Industries and Business, Elva a Lyon, Editor, Student Paper, the History of Candy and of Bradas and Gheens, Incorporated, Jane Poling, January 1942.

1940 Calendar for Klotz Confection Company Louisville, Kentucky Depicting Girl and Horse. Original Bands Top and Bottom and Full Pad. Very Good Original Condition. 16×34 Inches, Auction Location: 5055 Ann Arbor/Saline Rd., Ann Arbor, MI, 48103, United States.

Bradas & Gheens letterhead and invoice, Circa 1930.

Government Publications

Patent, George Cuscaden, Charles F Klotz, Harry a. Cuscaden of Louisville Kentucky, machine for molding ice cream, patent number 682, 243, dated September 10, 1901, application filed July 3, 1901. Serial number 67, 033. No model number.

Celler Bakeries in Their Dangers to Producers and Consumers, Stenographic Report of a Speech on Celler Bakeries and Their Effects, Health Commissioner of Chicago, Illinois, Published by the Bakery and Confectionery Workers International Union of America, 212 Bush Temple, Chicago Illinois, 1910

Women in the Candy Industry in Chicago and St. Louis, Bulletin (United States. Women's Bureau) Number 25. US Department Of Labor, 1923, Page 9. Regenstein HD 6093.A 55 Number 25.

National Register of Historic Places Nomination Forms

Ghirardelli Square National Register Nomination, San Francisco California.

Milton S Hershey Mansion National Register nomination, Hershey Pennsylvania.

Sanborn Insurance Maps for the City of Louisville:

For years: 1892, 1905, 1928, 1962, 1983.

Previous documentation on file (NPS):

___ preliminary determination of individual listing (36 CFR 67 has been requested)

Primary location of additional data:

_X_ State Historic Preservation Office
___ Other State agency

Klotz Confectionery Company Building
Name of Property

Jefferson County, Kentucky
County and State

___previously listed in the National Register
___previously determined eligible by the National Register
___designated a National Historic Landmark
___recorded by Historic American Buildings Survey
___*_____
___recorded by Historic American Engineering Record #
___ _____
___recorded by Historic American Landscape Survey #
___ _____

___Federal agency
___Local government
___University
___Other
Name of repository: _____

Historic Resources Survey Number _____JFL-7_____

10. Geographical Data

Acreage of Property 0.79 acres +/-

From Louisville PVA October 1, 2015
X: 1213201.42
Y: 275286.21

UTM References
Louisville East quad
Coordinates calculated using ArcGIS Explorer
Coordinates according to NAD 27: Zone: 16; Easting: 610734.60; Northing: 4233344.12

Coordinates according to NAD 83:

	Zone	Easting	Northing		Zone	Easting	Northing
1	**16**	**610731.81**	**4233550.36**	3			
2				4			

Verbal Boundary Description
The property proposed for this listing corresponds to the Jefferson County Property Valuation Administrator parcel 09021D00880000. This parcel corresponds to the address 731 Brent Street. The entire Klotz Confectionery Company and all the land historically associated with it is proposed for listing.

Boundary Justification
The boundary encompasses the entirety of the real property and the extent of the historic structure. The structure has, since its inception, occupied the site.

11. Form Prepared By

name/title Joanne Weeter
organization Historic Preservation Consultant date October 1, 2015
street & number 4302 Talahi Way telephone 502-296-7666
city or town Louisville state KY zip code 40207
e-mail Joanne.Weeter@Gmail.com

Photographs:

Name of property:	Klotz Confectionary Company Building
City or vicinity:	Louisville
County:	Jefferson
State:	Kentucky
Photographer:	Joanne Weeter
Date of photographs:	September 2015
Location of original Digital files:	KHC/SHPO
Number of photographs:	9

Number and Description of each Photograph
1 of 9: Photo 1: Primary/West Façade on Brent Street
KY_Jefferson County_Klotz Confectionery Company Building _0001

2 of 9: Photo 2: Secondary/South Façade Showing Louisville Stoneware Parking
KY_Jefferson County_Klotz Confectionery Company Building _0002

3 of 9: Photo 3: Secondary/South Façade Showing Louisville Stoneware Entrance
KY_Jefferson County_Klotz Confectionery Company Building _0003

4 of 9: Photo 4: Secondary/East Façade Showing Building Rear from Southern Part of Alley
KY_Jefferson County_Klotz Confectionery Company Building _0004

5 of 9: Photo 5: Secondary/East Façade Showing Building Rear from Northern Part of Alley
KY_Jefferson County_Klotz Confectionery Company Building _0005

6 of 9: Photo 6: Secondary/North Façade, Pergola & Security Fence with Railroad Tracks in Foreground
KY_Jefferson County_Klotz Confectionery Company Building _0006

7 of 9: Photo 7: Pavement and Railroad Tracks Adjacent to Secondary/North Façade
KY_Jefferson County_Klotz Confectionery Company Building _0007

8 of 9: Photo 8: Interior View
KY_Jefferson County_Klotz Confectionery Company Building _0008

9 of 9: Photo 9: Interior View
KY_Jefferson County_Klotz Confectionery Company Building _0009

Property Owner:

name KENTUCKY CERAMICS LLC, c/o Steve Smith

street & number 333 E MAIN ST STE 401 telephone 502.821.0054

city or town Louisville state KY zip code 40202-1297

UNITED STATES
DEPARTMENT OF THE INTERIOR
GEOLOGICAL SURVEY

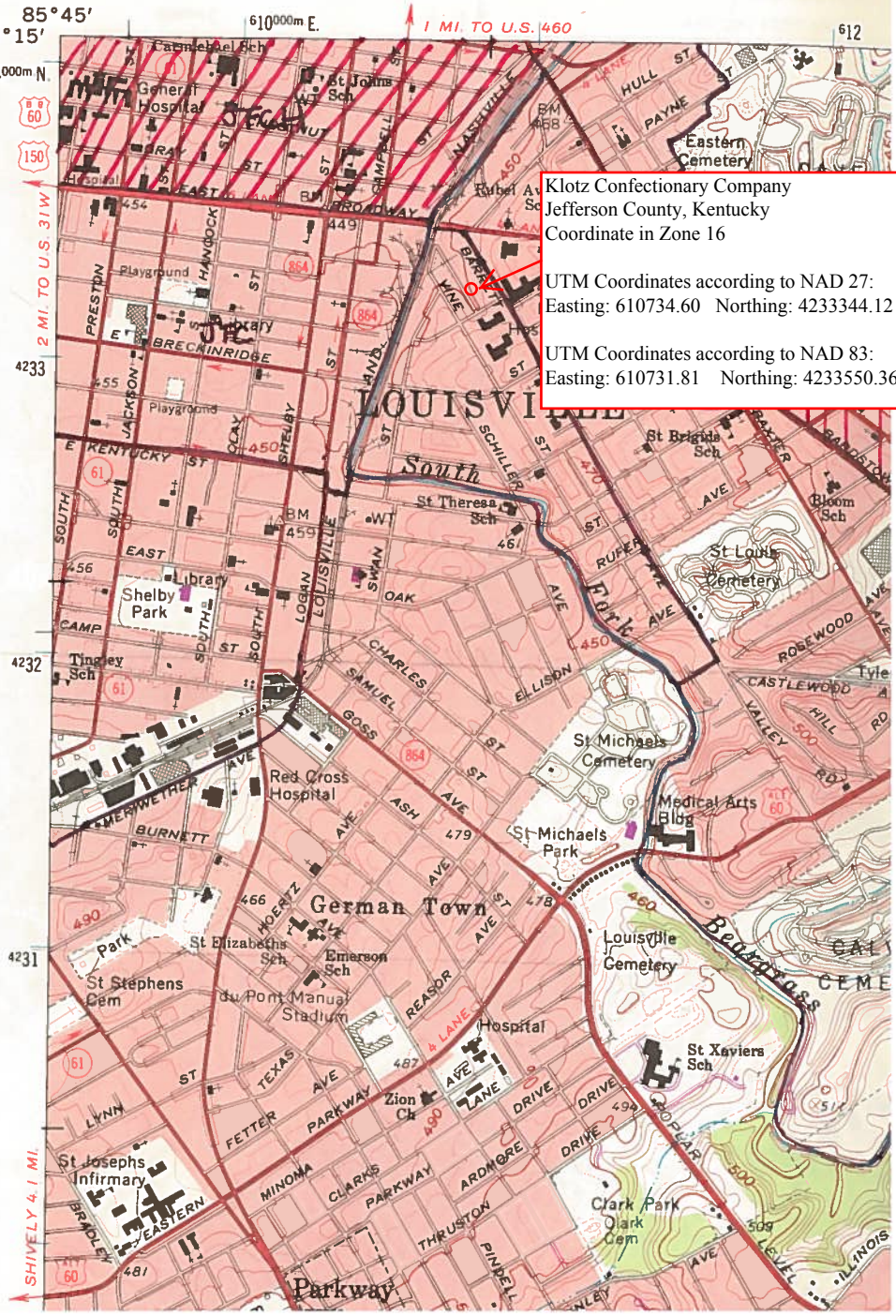

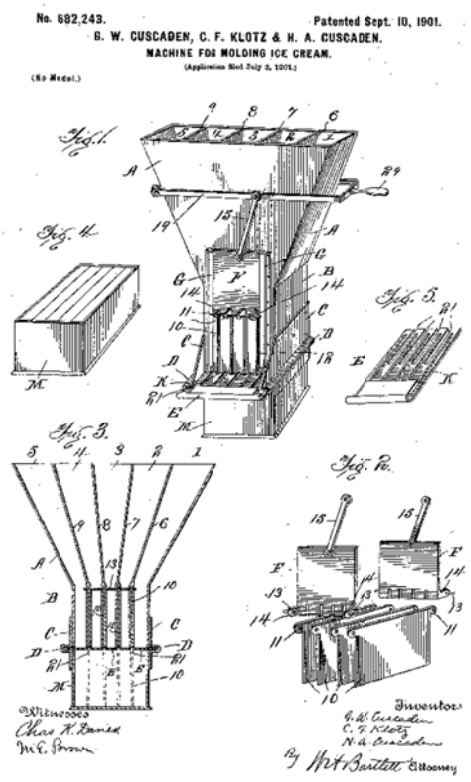

[redacted]

US patent #682, 243: for machine for molding ice cream (1901)

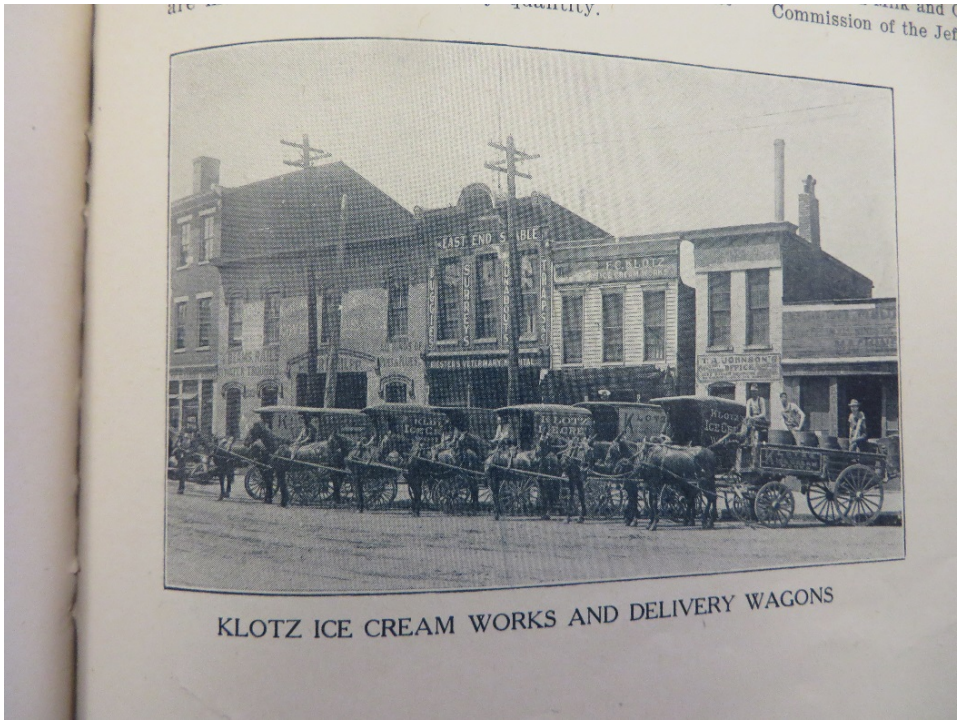

Photo source: Greater Louisville Illustrated, 1908

Undated photo showing horse-drawn delivery wagons in front of the Klotz Ice Cream Works, from Klotz Family Archival Collection

Before Firemen Arrived

Fire-Damaged Candy Firm Plans Repairs

Courier-Journal article, August 3, 1937, from Klotz Family Archival Collection

A SATISFIED CUSTOMER is the Best Advertisement

Read What Mr. Klotz Has to Say:

★ LIBERTY FIRE INSURANCE CO. ★

Courier-Journal advertisement showing letter from a Klotz confectionary company dated August 26, 1937, from Klotz family archival collection

1937

Photo 1: Klotz Confection Company, Louisville, Kentucky-one of the nation's largest fudge and brittle manufacturers (circa 1937).

Photo 2: Where Klotz's fudges and brittles are cooked-Klotz Confection Company, Louisville Kentucky (circa 1937).

Photo 3: Where Klotz's fudges and brittles are cooked--Klotz Confection Company, Louisville, Kentucky (circa 1937).

Photo 4: Cutting Klotz nutty brittle-Klotz'snutty brittle--Klotz Confection Company, Louisville, Kentucky (circa 1937).

Photo 5: Where Klotz's fudges and brittles are packed-Klotz Confection Company, Louisville, Kentucky (circa 1937).

2015 photo showing railroad tracks adjacent to yellow "anytime" dumpster